mau-jo

DA-0108

MauveCom

HD compatible 8-way VGA splitter for digital signage applications

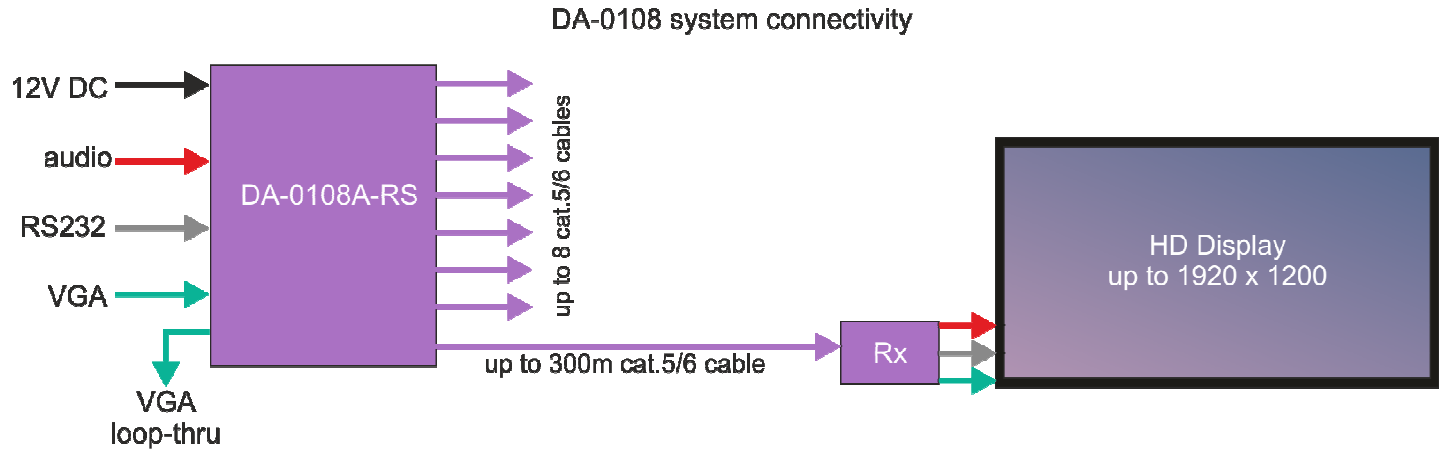

Overview

The DA-0108 is an easy way to send a single HD VGA signal to multiple displays via cat.5/6 cable distances of up to 300m. It is intended for digital signage or any multi-screen application. The DA-0108 is part of the mau-jo range which has 1000's of installed systems with enviable reliability.

The DA-0108 is available with VGA only or with audio and 1-way RS232. Custom metalwork (above) enables two DA -0108s to be installed in a 1U 19" space. The loop-thru function enables the easy creation of a 16-way system.

Mau-jo will also work with legacy 'duplicat' systems in old installations. Resolutions of up to 1920x1200 are supported

Audio & RS232

The DA-0108A-RS allows high quality stereo audio to be delivered to displays. The analogue stereo input is digitised for high fidelity transmission. RS232 is supported in in the downstream direction only. This is typically used to control displays via an AV controller such as AMX/ Crestron/Extron, etc.

Power

DC power comes from a massively over-spec'd IEC power supply and DC power is transmitted down the cat.5/6 cables to power the receive units at the display end. The over-specified PSU ensures cool running and long life.

Product options and ordering codes

8-way versions

VGA only	DA-0108
VGA+ audio + RS232 (1-way)	DA-0108A-RS

8+8 way versions in 1U 19" rack

VGA only	DA-0216-19
VGA+ audio + RS232 (1-way)	DA-0216A-RS-19

Product specifications

Dims	DA-0108 models:160x135x38mm
	DA-0216-19 models: 19"x1Ux141mm
Power	12V DC 100mA nominal
Audio	stereo line level. Digitised to 24 bits for transmission
RS232	19.2kbaud max
	'RS' versions downstream Tx only—no crossover

tel: +44 (0) 1962 622 064
email: info@mauvecom.co.uk
www.mauvecom.co.uk